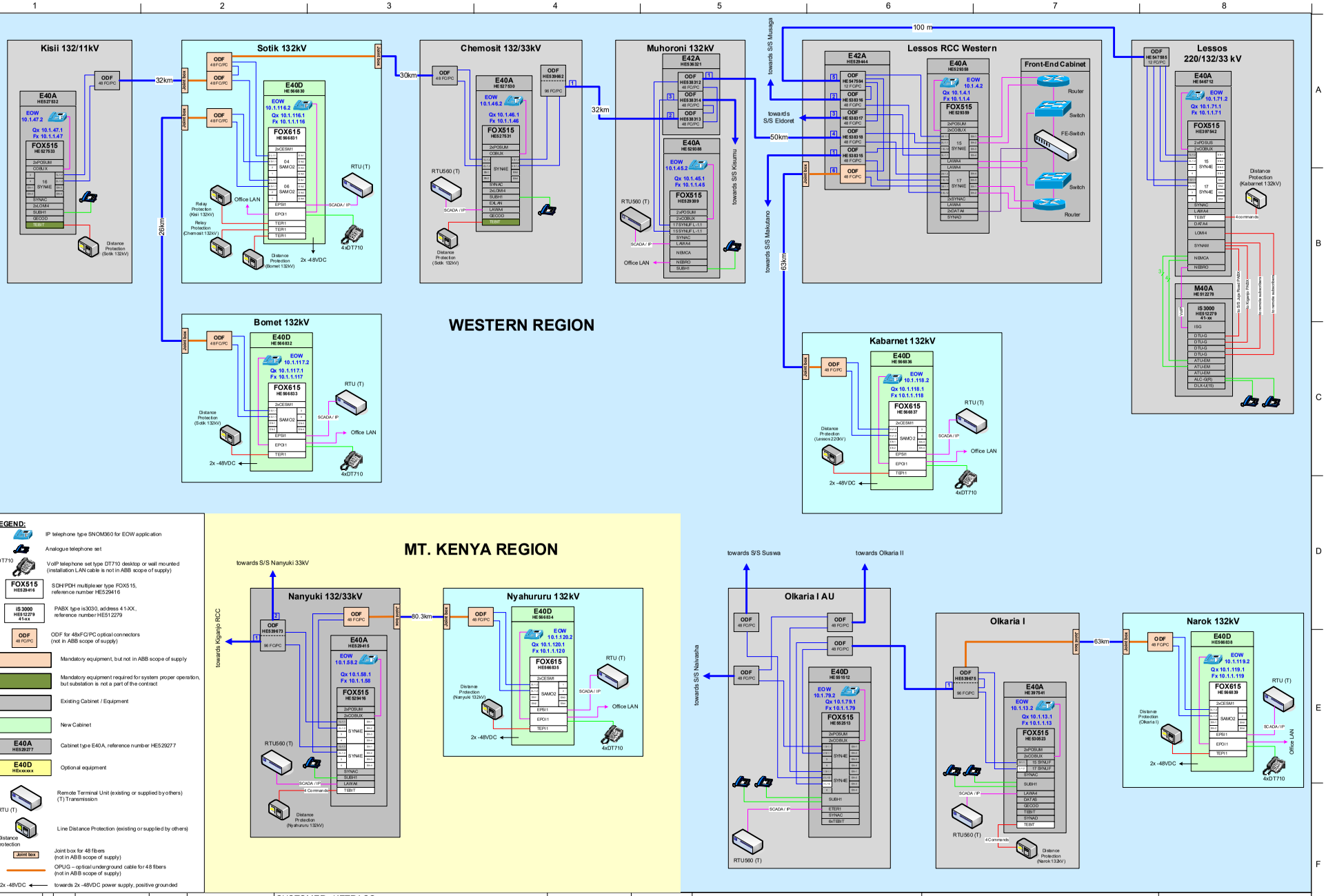

We reserve all rights in this document and in the information contained therin. Reproduction, use or disclosure to third parties without express authority is strictly forbidden (C) Copyright 2004 ABB

Revision										
A	13-10-2014/AKH			Prepared	26-06-2014/SOT	CUSTOMER: KETRACO OFFER: KENYA POWER IMPROVEMENT (LOT 3a) ABB NO: 17252	ABB PSN ABB Switzerland Ltd	Title: TELECOMMUNICATION SYSTEM SYSTEM LAYOUT BROADBAND SYSTEM	SYSTEM OVERVIEW	= +
				Reviewed						
				Approved	26-06-2014/AKH	Based on	Repl.	Repl. by	Doc. vsd / Format 3 / Lang. EN	1KHD657215 / Sheet 500 / No.of sh. 1/5