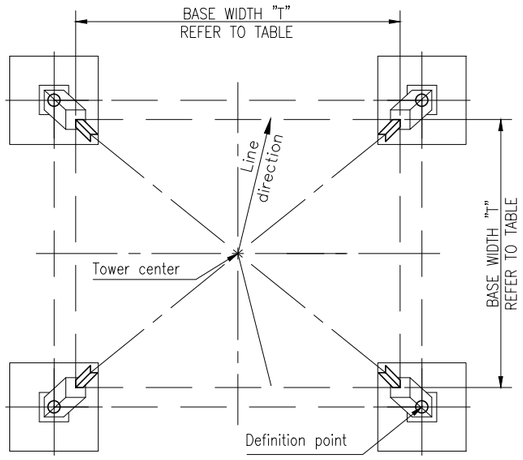

Section A–A
Scale 1:20

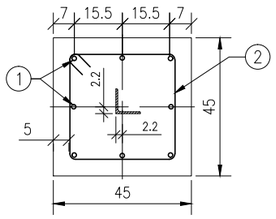

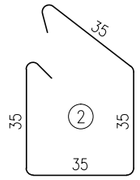

9 ø8 L=150

Detailing according to BS 4466:1989

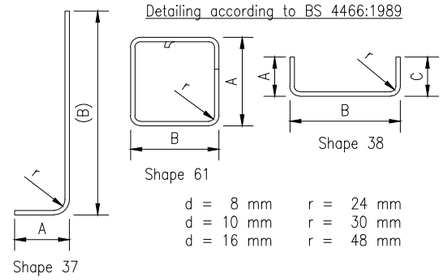

d = 8 mm r = 24 mm
d = 10 mm r = 30 mm
d = 16 mm r = 48 mm

Section B–B

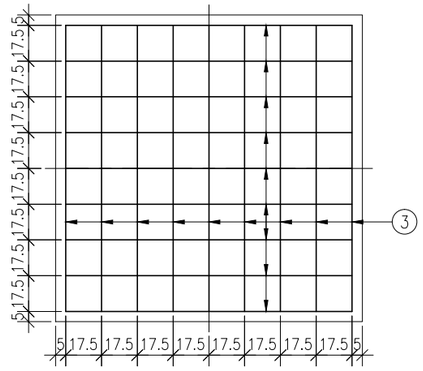

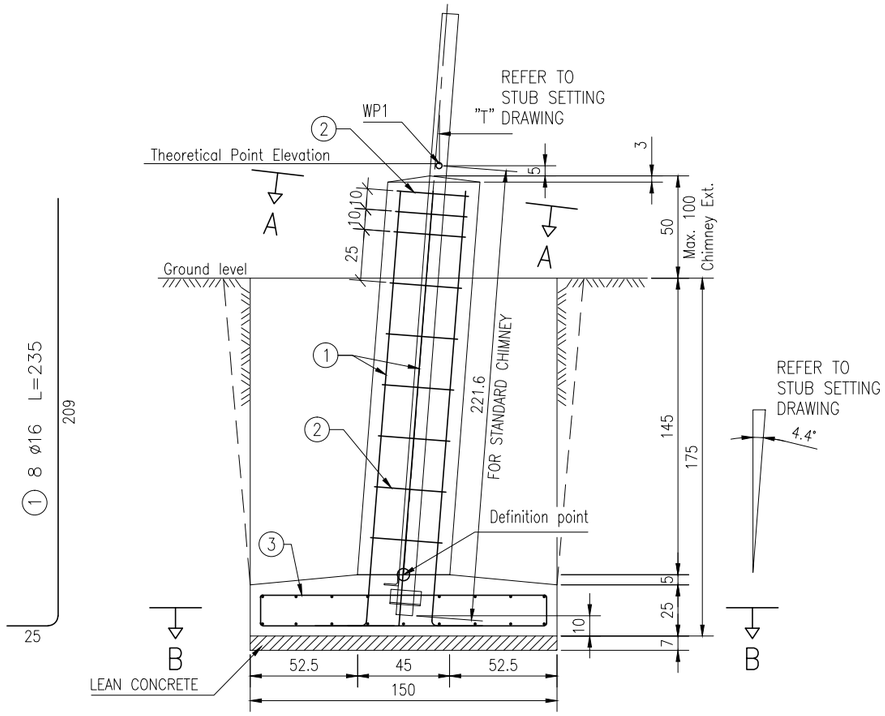

3 36 ø10 L=170

BASE WIDTH [mm]		
TOWER TYPE	BODY EXT.	T
S	+0	3980
	+3	4442
	+6	4904
	+9	5366

BAR SCHEDULE – STANDARD CHIMNEY

Member	Bar mark	Type and size	No.of bars	Length of each bar mm	Shape code	A mm	B mm	C mm	D mm	E/R mm
Chimney	1	X16	8	2350	37	250	2090	–	–	–
Chimney	2	X8	9	1500	61	350	350	–	–	–
Pad	3	X10	36	1700	38	150	1400	150	–	–

SUMMARY OF MATERIALS AND WORKS (ONE LEG)		ø16	ø10	ø8
Total length per dia. :	m	18.8	61.2	13.5
Unit weight of reinforcing steel :	kg	1.579	0.617	0.395
Total weight of reinforcing steel (per dia) :	kg	29.7	37.8	5.3
Total weight of reinforcement :		72.8 Kg		
Excavation : 4.095 m^3	Concrete :	1.008 m^3		
Backfilling : 3.185 m^3	Blinding :	0.158 m^3		

BAR SCHEDULE – EXTENDED CHIMNEY (+50cm)

Member	Bar mark	Type and size	No.of bars	Length of each bar mm	Shape code	A mm	B mm	C mm	D mm	E/R mm
Chimney	1	X16	8	2850	37	250	2590	–	–	–
Chimney	2	X8	11	1500	61	350	350	–	–	–
Pad	3	X10	36	1700	38	150	1400	150	–	–

SUMMARY OF MATERIALS AND WORKS (ONE LEG)		ø16	ø10	ø8
Total length per dia. :	m	22.8	61.2	16.5
Unit weight of reinforcing steel :	kg	1.579	0.617	0.395
Total weight of reinforcing steel (per dia) :	kg	36.0	37.8	6.5
Total weight of reinforcement :		80.3 Kg		
Excavation : 4.095 m^3	Concrete :	1.110 m^3		
Backfilling : 3.185 m^3	Blinding :	0.158 m^3		

NOTES:

GENERAL NOTES:
1. DIMENSIONS IN cm OR AS SPECIFIED.
2. STUB ANGLE DRAWING NO. KC06.0040_OHL_STR_22-05-01 sh.013.
3. DIMENSION "T" TO BE CHECKED WITH TOWER'S ERECTION DRAWINGS.
4. THIS FOUNDATION SHALL BE USED IN LOCATIONS WHERE THE ALLOWABLE BEARING CAPACITY OF THE SOIL IS AT LEAST 2 daN/cm^2, ACCORDING TO GEOTECHNICAL SURVEY REPORT.

FOUNDATION DESIGN PARAMETERS:
1. CONSIDERED WATER LEVEL IS ALWAYS BELOW FOUNDATION.
2. SOIL TYPE 1:
   2.1. SOIL ANGLE OF REPOSE: 30°.
   2.2. SOIL UNIT WEIGHT: 1600 kg/m^3.
   2.3. ULTIMATE BEARING CAPACITY: 6 daN/cm^2.
   2.4. ALLOWABLE BEARING CAPACITY: 2 daN/cm^2.
3. LOADING AS SHOWN IN TOWER DESIGN CALCULATION.
4. IF ANY OF THE ABOVE ASSUMPTIONS ARE FOUND TO BE INVALID IMMEDIATELY CEASE CONSTRUCTION AND CONTACT THE ENGINEER.

CONCRETE MATERIAL:
1. MINIMUM 28 DAYS COMPRESSIVE STRENGTH: 25 N/mm^2.
2. CONCRETE COVER: 5 cm.
3. LEAN CONCRETE SHALL HAVE THE FOLLOWING RATIO OF
   CEMENT : FINE AGGREGATE : COARSE AGGREGATE = 1 : 3 : 5, MEASURED BY VOLUME.

REINFORCING STEEL MATERIAL:
1. ø = REBAR DIAMETER IN mm.
2. REINFORCED CONCRETE DESIGN, BAR SCHEDULE, DETAILING AND EXTENSIONS OF REBARS WILL BE ACCORDING TO BS 8110 AND BS 4466. REBAR EXTENSION BY OVERLAPPING ON 50 DIA.
3. MAIN REINFORCEMENT SHALL BE DEFORMED BARS OF HIGH TENSILE STEEL WITH MINIMUM YIELD STRENGTH: F_y=500 N/mm^2.
4. LINKS SHALL BE OF PLAIN BARS OF MILD STEEL WITH MINIMUM YIELD STRENGTH: F_y=240 N/mm^2.

REV.	dd/mm/yy	REVISION DESCRIPTION	DRAWN	CHECKED	APPROVED
01	10/05/13	First issue;	PG	SI	VR

CG Holdings Belgium NV
Systems Division
Antwerpsesteenweg 167, B-2800 Mechelen
Tel. : +32(0)15/283 333 Fax : +32(0)15/283 491
www.cgglobal.com

ISO Symbol: SCALE: 1/30 LAYOUT: A3

THIS DRAWING SHALL NOT BE COPIED,REPRODUCED,TRANSMITTED OR GRANTED TO THIRD PARTIES WITHOUT OUR PRIOR AGREEMENT

CLIENT:
MINISTRY OF ENERGY - REPUBLIC OF KENYA

DRAWING TITLE :
132 kV OHL Nanyuki - Isiolo - Meru
Foundation Type SF1 for Tower Type S

DRAWING No.: 100008-L0-DG-CW00